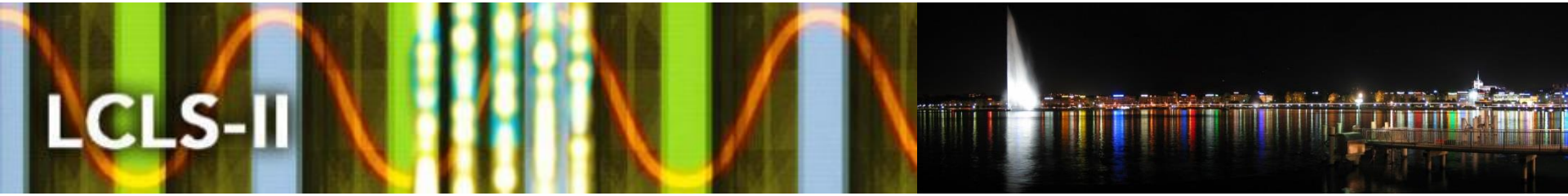

The New LCLS-II Project: Status and Challenges

John N. Galayda

LINAC2014 - Geneva, Switzerland

2 September 2014

SLAC NATIONAL ACCELERATOR LABORATORY

BERKELEY LAB Lawrence Berkeley National Laboratory

Argonne NATIONAL LABORATORY

CORNELL UNIVERSITY FOUNDED A.D. 1865

Fermilab

Jefferson Lab

U.S. DEPARTMENT OF ENERGY Office of Science


SLAC 3 km linac
1962: start construction
1967: first 20 GeV electron beam
1979: first 30 GeV electron beam w/SLED
1989: first 50 GeV electrons & positrons
2006: first 84 GeV electrons: PWFA afterburner

LCLS: 17 years from idea to first light

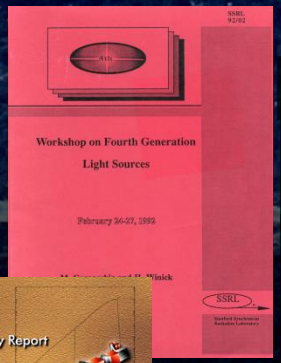

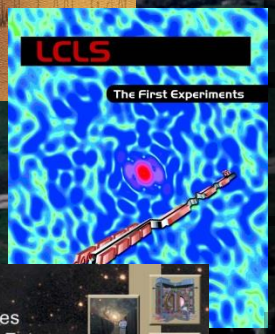

1992: Proposal (Pellegrini), Study Group(Winick)

1994: National Academies Report http://books.nap.edu/books/NI000099/html/index.html

1996: Design Study Group (M. Cornacchia)

1997: BESAC (Birgeneau) Report http://www.sc.doe.gov/production/bes/BESAC/reports.html

1998: LCLS Design Study Report SLAC-521

1999: BESAC (Leone) Report http://www.sc.doe.gov/production/bes/BESAC/reports.html
$1.5M/year, 4 years

2000: LCLS- the First Experiments (Shenoy & Stohr) SLAC-R-611

2001: DOE Critical Decision 0 – Permission to develop concept

2002: LCLS Conceptual Design
DOE Critical Decision 1 Permission to do Engineering Design
$36M for Project Engineering Design

2003: DOE Critical Decision 2A: accept estimate of
$30M in 2005 for Long Lead Procurements

2004: DOE 20-Year Facilities Roadmap

2005: Critical Decision 2B: Define Project Baseline
Critical Decision 3A: Long-Lead Acquisitions

2006: Critical Decision 3B: Groundbreaking

2009: First Light, 10 April 2009

2010: Project Completion

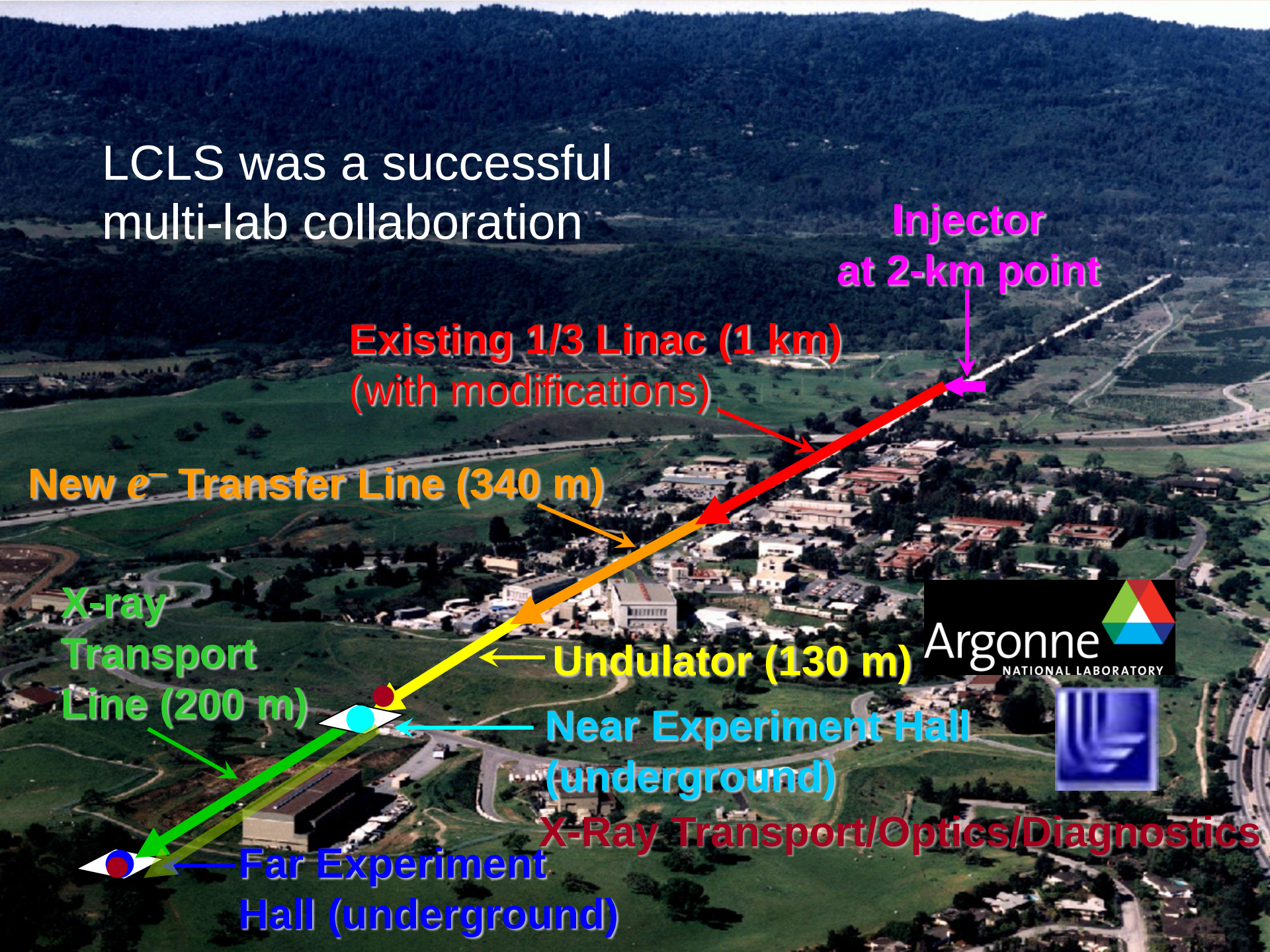
LCLS was a successful multi-lab collaboration
Injector at 2-km point
Existing 1/3 Linac (1 km) (with modifications)
New e^- Transfer Line (340 m)
X-ray Transport Line (200 m)
Undulator (130 m)
Near Experiment Hall (underground)
X-Ray Transport/Optics/Diagnostics
Far Experiment Hall (underground)
Argonne NATIONAL LABORATORY

Heavy demand for access to LCLS; only one undulator

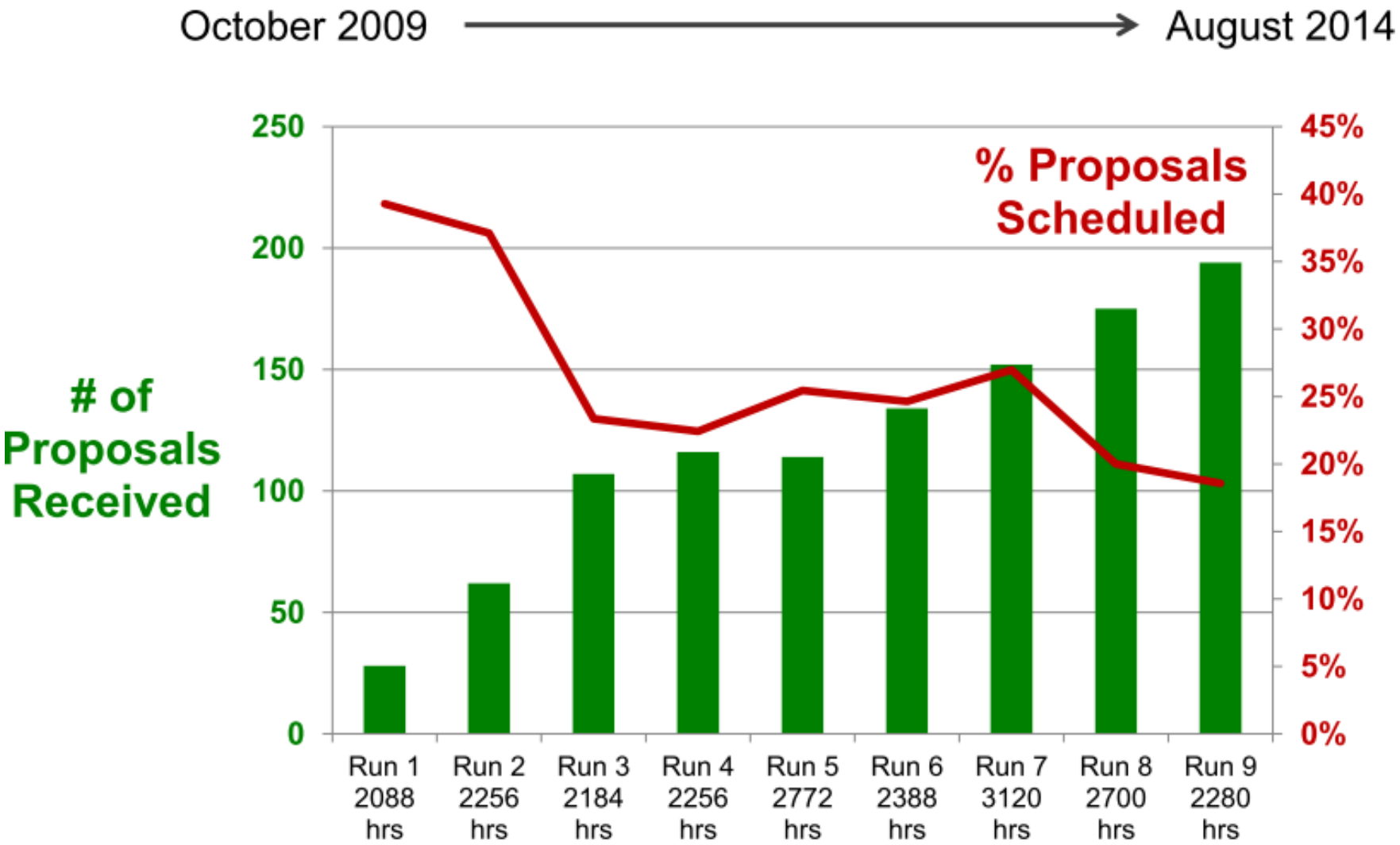

BESAC Subcommittee Outcome: July 25, 2013

- Committee report & presentation to BESAC:
  - "It is considered essential that the new light source have the pulse characteristics and **high repetition rate** necessary to carry out a broad range of coherent "pump probe" experiments, in addition to a sufficiently broad photon energy range (**at least *~0.2 keV to ~5.0 keV***)"
  - "It appears that such a new light source that would meet the challenges of the future by *delivering a capability that is beyond that of any existing or planned facility worldwide is now within reach.* **However, *no proposal presented to the BESAC light source sub-committee meets these criteria*."**
  - "The panel recommends that a decision to proceed toward a new light source with revolutionary capabilities be accompanied by a robust R&D effort in accelerator and detector technology that will maximize the cost-efficiency of the facility and fully utilize its unprecedented source characteristics."

Timeline

So far:

- BESAC subcommittee report 25 July 2013
- DoE signed "mission need" for new source 27 Sep 2013
- First collaboration/planning meeting @ SLAC 9-11 Oct 2013
- First complete cost estimate 28 Oct 2013
- **LCLS-II Collaboration Agreement signed** 8 Nov 2013
- Critical Decision 1 – Dept of Energy permission to complete the design
    - *
    - *
    - *
- Project completion – date not "frozen" yet

Project Collaboration: SLAC couldn't do this without…

Fermilab	• 50% of cryomodules: 1.3 GHz • Cryomodules: 3.9 GHz • Cryomodule engineering/design • Helium distribution • Processing for high Q (FNAL-invented gas doping)
Jefferson Lab EXPLORING THE NATURE OF MATTER	• 50% of cryomodules: 1.3 GHz • Cryoplant selection/design • Processing for high Q
Berkeley Lab	• Undulators • e^- gun & associated injector systems
Argonne NATIONAL LABORATORY	• Undulator Vacuum Chamber • Also supports FNAL w/ SCRF cleaning facility • Undulator R&D: vertical polarization
Cornell University Founded A.D. 1865	• R&D planning, prototype support • processing for high-Q (high Q gas doping) • e^- gun option

A New LCLS-II Project Redesigned in Response to BESAC

Accelerator	**<u>Superconducting linac</u>**: 4 GeV
Undulators in existing LCLS-I Tunnel	New variable gap (north) New variable gap (south), replaces existing fixed-gap und.
Instruments	Re-purpose existing instruments (instrument and detector upgrades needed to fully exploit)

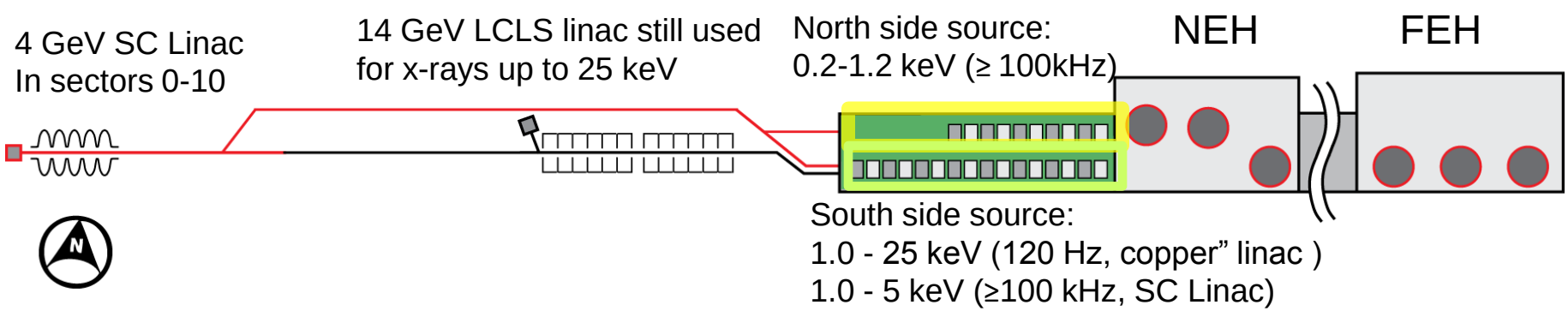

Linac Design

Linac Acceleration and Compression (100 pC)

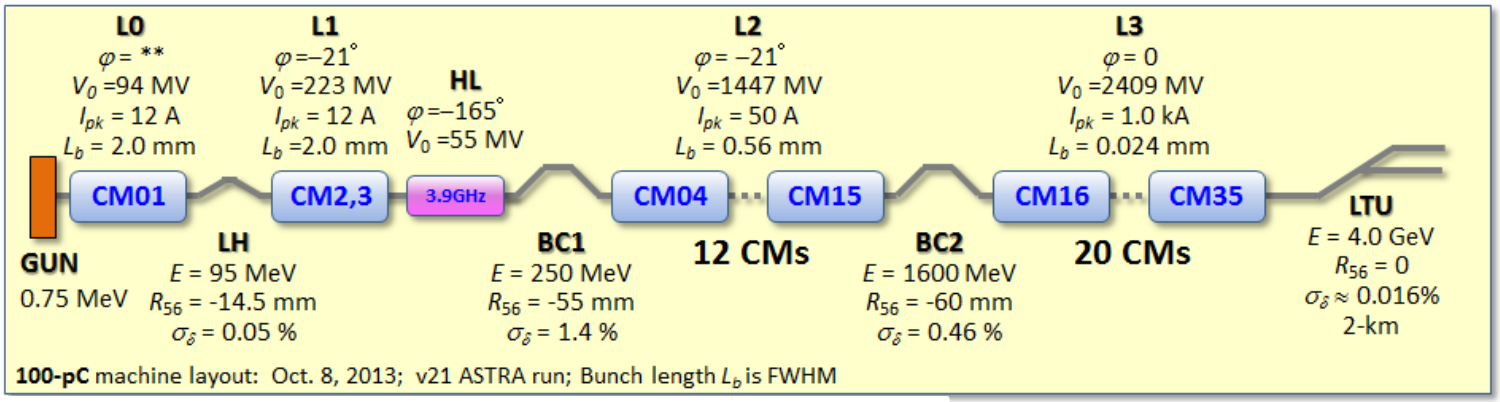

Also considering Cornell DC Gun

Gulliford, et al. PRSTAB 16 073401 (2013)

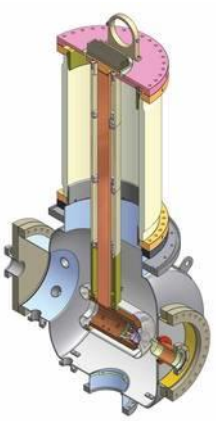

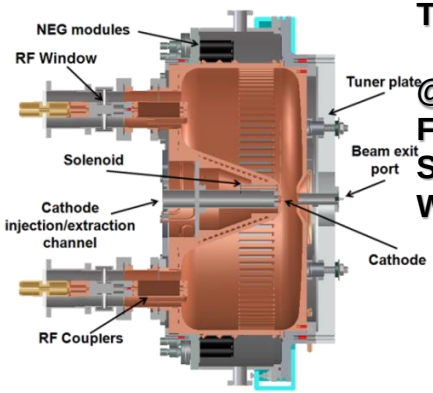

J. Staples, F. Sannibale, S. Virostek, CBP Tech Note 366, Oct. 2006

@ IPAC2014:
Filipetto, et al. MOPRI053, MOPRI055
Sannibale, et al. MOPRI054
Wells, et al. MOPRI056

K. Baptiste, et al, NIM A 599, 9 (2009)

Includes 2-km RW-wake

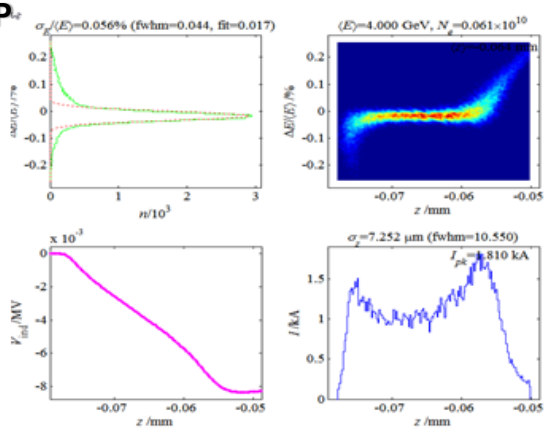

rms stability: ~0.01%, ~0.01°

TUPP122 **Roughness tolerances in the undulator vacuum chamber of LCLS-II,** K.L.F. Bane et al.
MOPP127 **Wakefield effects of the bypass line in LCLS-II** K.L.F. Bane, et al.

X-Ray Power

A stated project goal is to deliver at least 20 W X-rays from the SC linac to an experiment, independent of repetition rate

This goal can be exceeded by a large margin with 120 kW of electrons- design goal for beam dumps(M. Santana, THPIO86)

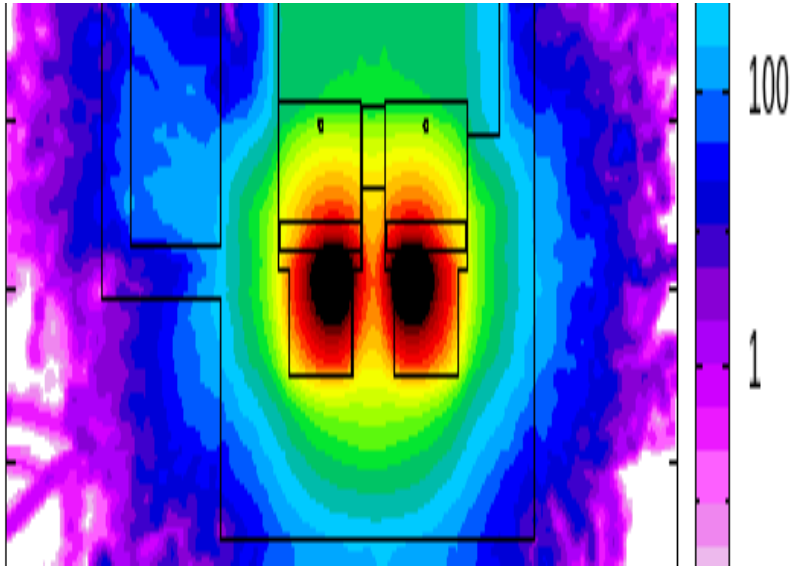

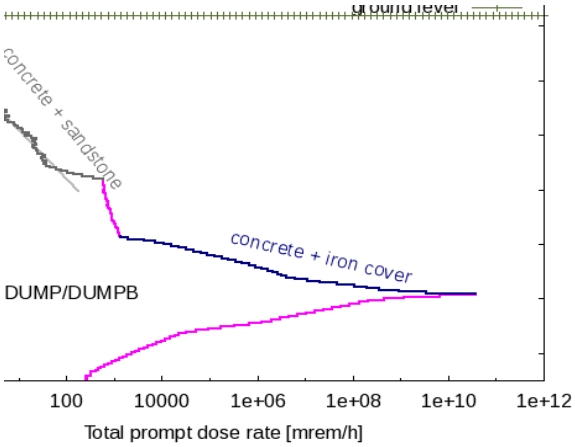

M. Santana, S. Rokni

Parameters for the SC Accelerator

Parameter	Nominal	Range	Units
Final electron energy	4	2-4.14	GeV
Electron bunch charge	0.1	0.01-0.3	nC
Bunch repetition rate	0.62	0-0.93	MHz
Average linac current	62	1-300	μA
Average beam power	0.25	≤1.2	MW
emittance	0.45	0.2-0.7	μm
Peak current	1	0.5-1.5	kA
Bunch length	8.3	0.6-52	μm
Usable bunch length	50		%
Compression factor	85	25-150	
Slice energy spread	0.5	0.15-1.5	MeV
Beam stability goals			
Energy, rms	<0.01		%
Peak Current	<5		%
Bunch arrival time	<20		fs
beam stability (x, y)	<10		%

Copper LCLS accelerator will continue to run unchanged

LCLS-II Performance: Average Brightness, photons/pulse

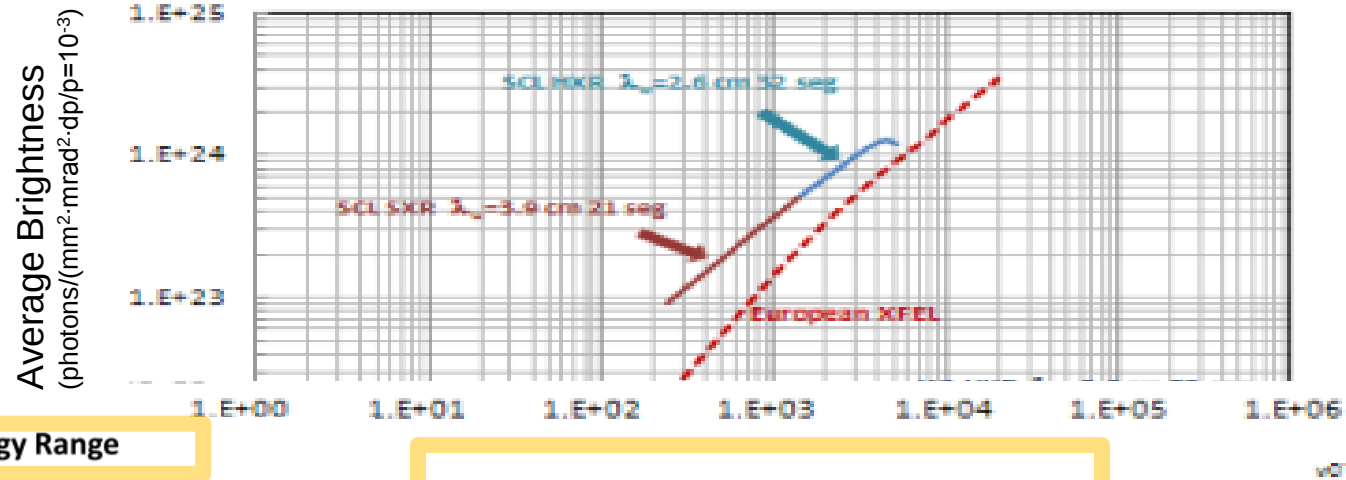

SC Linac Photon Energy Range (eV)

Cu-Linac Photon Energy Range

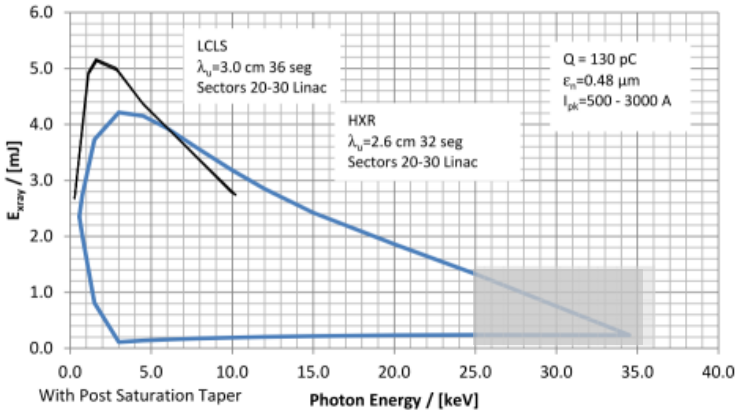

Calculated X-ray pulse energies versus photon energy for the CuRF linac (blue) and the similar curve for the existing LCLS (black).

SCRF Cryomodules will go into the SLAC Tunnel

SLAC Linac Tunnel: 3.53m wide x 3.05 m high

It will be a tight fit…

A mock-up of the tunnel and hardware has been built to check clearances

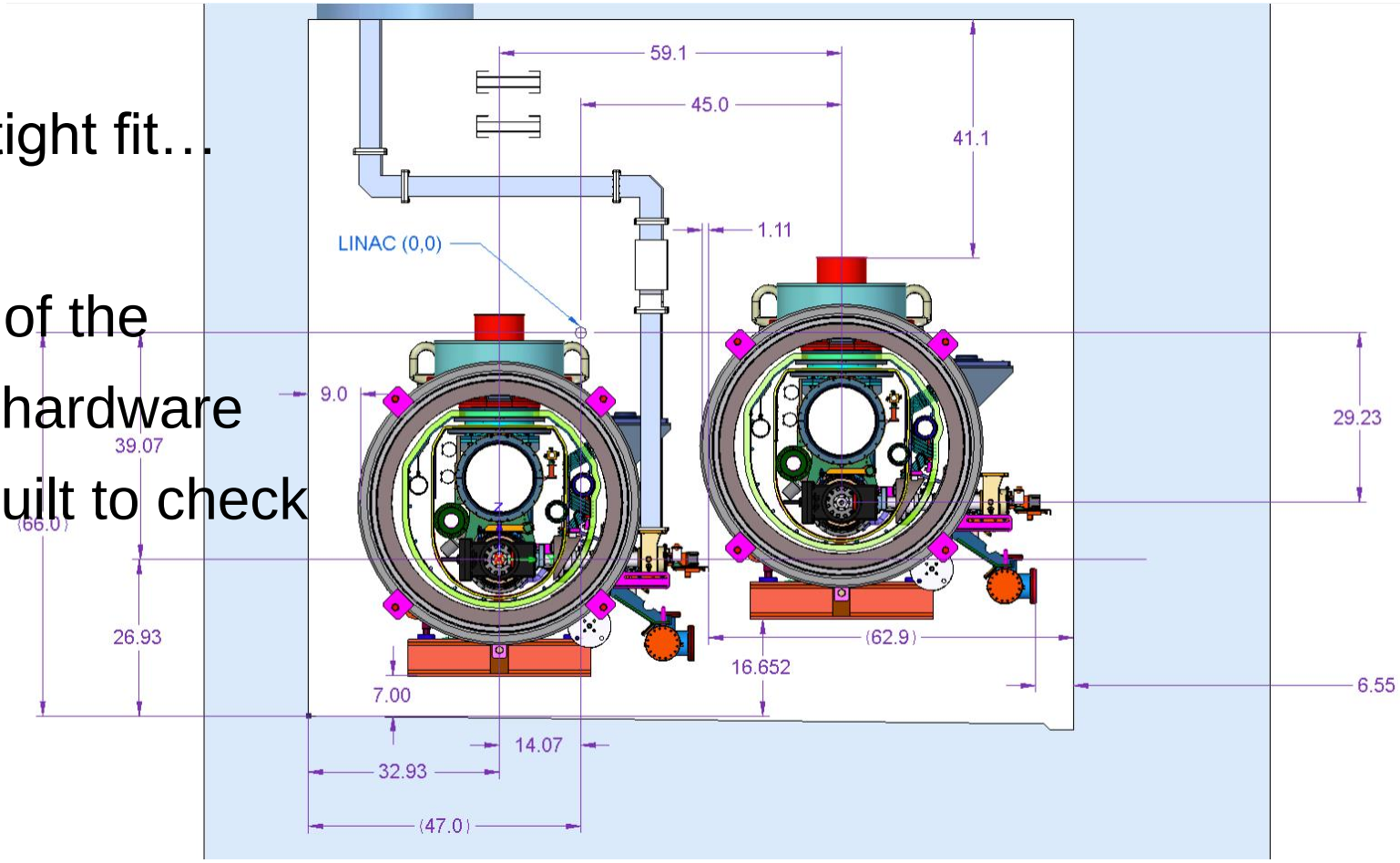

S. Boo, J. Chan

Cryomodule:
ILC Type 3 + Some Modifications for LCLS-II

Component design – existing designs

- Cavities – XFEL identical
- Helium vessel – XFEL-like
- HOM coupler – XFEL-like or –identical
- Magnetic shielding – increased from XFEL/ILC to maintain high Q0
- Tuner – XFEL or XFEL-like end-lever style
- Magnet – Fermilab/KEK design split quadrupole
- BPM – DESY button-style with modified feedthrough
- Coupler – XFEL-like (TTF3) modified for higher QL and 7 kW CW

Concerns based on global experience

- Tuner motor and piezo lifetime: access points may shorten time-to-repair
- Maintain high Q0 by minimizing flux trapping: possible constraints on cooldown rate through transition temperature

- **Tom Peterson, FNAL**

MOPP053
TTF3 Coupler Modification for CW operation, I.V. Gonin, et al.
MOPP126
Untrapped HOM radiation absorption in the LCLS-II cryomodules
K.L.F. Bane,, et al.
THPP054
Study of Coupler's effect in Third Harmonic Section of LCLS-II SC Linac, A. Saini

LCLS-II Cryomodule & Cryogenic Circuits

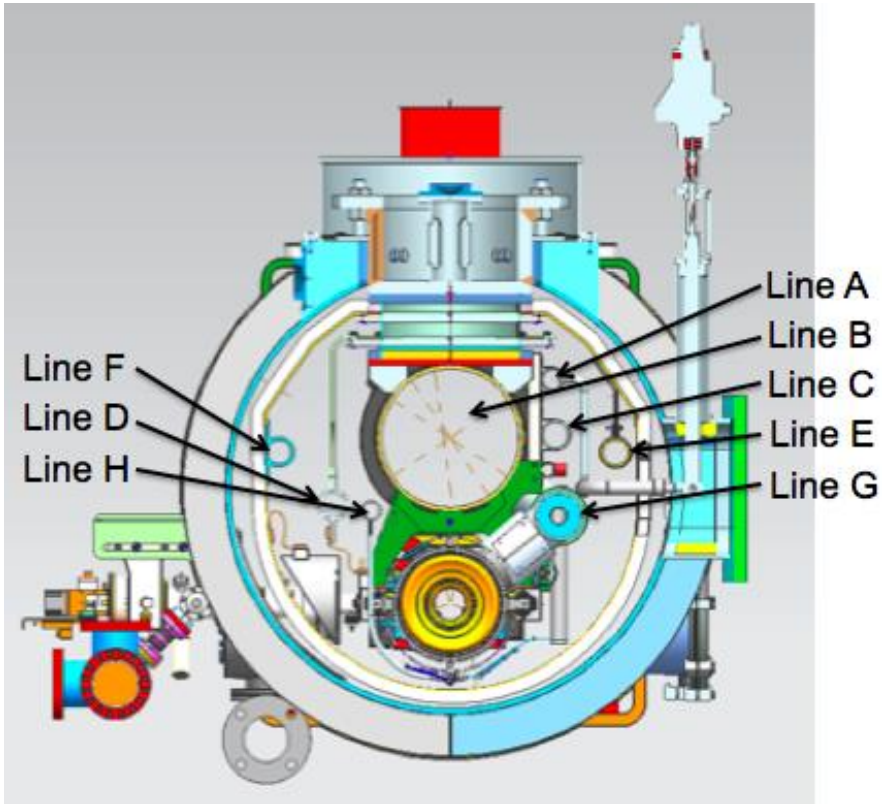

Circuit (Line)

A. 2.2 K subcooled supply
B. Gas return pipe (GRP)
C. Low temperature intercept supply
D. Low temperature intercept return
E. High temperature shield supply
F. High temperature shield return
G. 2-phase pipe
H. Warm-up/cool-down line

No 5K shield

Extra magnetic field shield

Operating Parameters	A	B	C	D	E	F	G	H
Pressure, [bar]	3	0.031	3	2.8	3.7	2.7	0.031	3
Temperature, K	2.4	2.0	4.5	5.5	35	55	2.0	2.0

Cryoplant:
D. Arenius - THIOB01

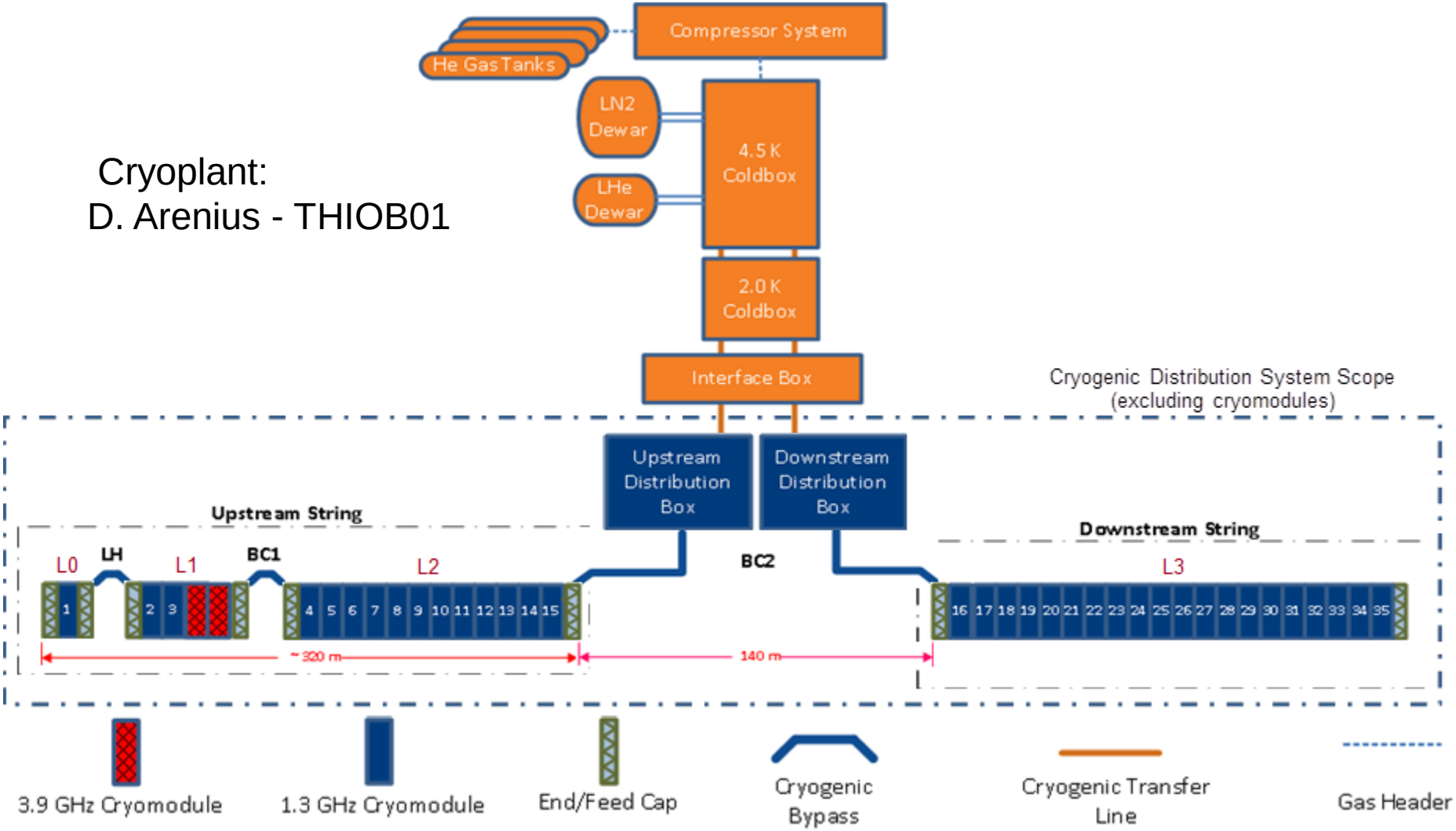

Fermilab-developed 'gas-doping' process →

- *A. Grassellino, et al., "New insights on the physics of RF surface resistance", TUIOA03, 2013 SRF Conference, Paris, France*

- A cavity processing recipe that results in high quality factors (>3E10) at operating gradients between 10 and 20 MV/m.
- Starting 2/2014, Fermilab has led a "Qo for LCLS-II" program in collaboration with Cornell and JLab.
- The primary goal is to develop a reliable and industrially compatible processing recipe to achieve an average Q0 of 2.7E10 at 16 MV/m in a practical cryomodule; minimum 1.5E10.
- To reach this goal, the collaborating institutions processed and tested single-cell and 9-cell 1.3 GHz cavities in a successive optimization cycle.
- The deliverable is industrial capability and cost-effective production yield.
  - Supporting the cryoplant design choices

Nitrogen Doping to enable 4 GeV linac, 4 kW Cryoplant
A Breakthrough for CW linac performance

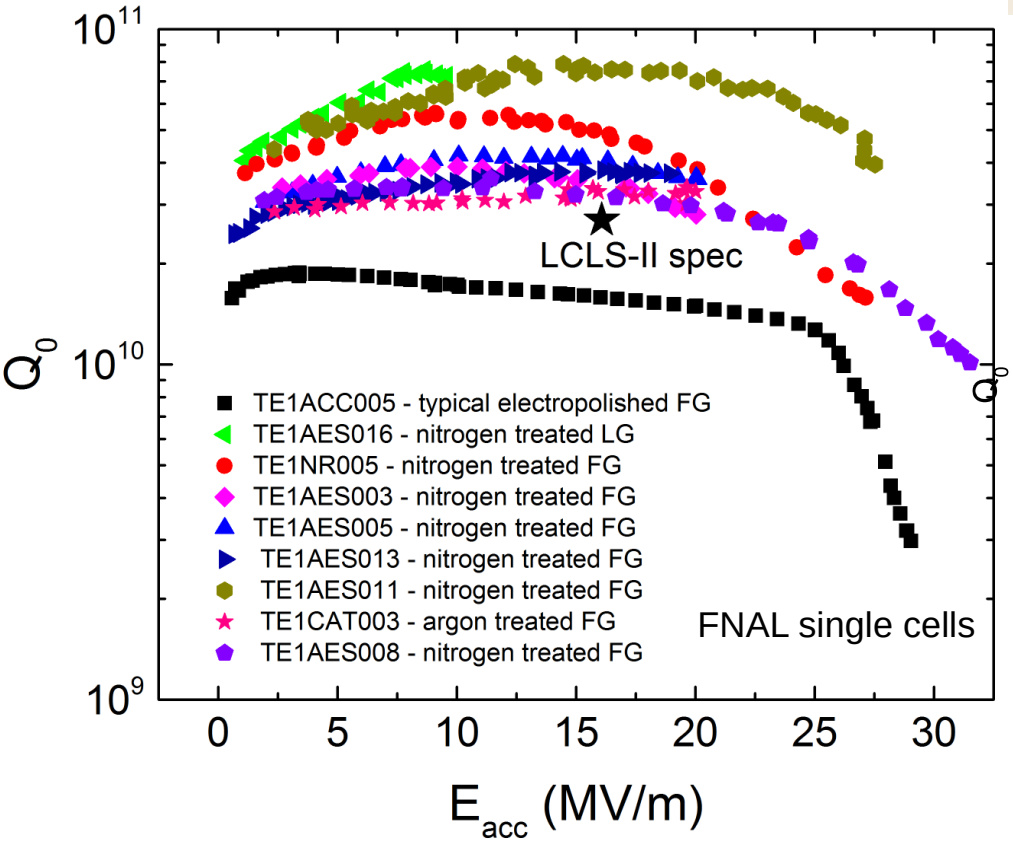

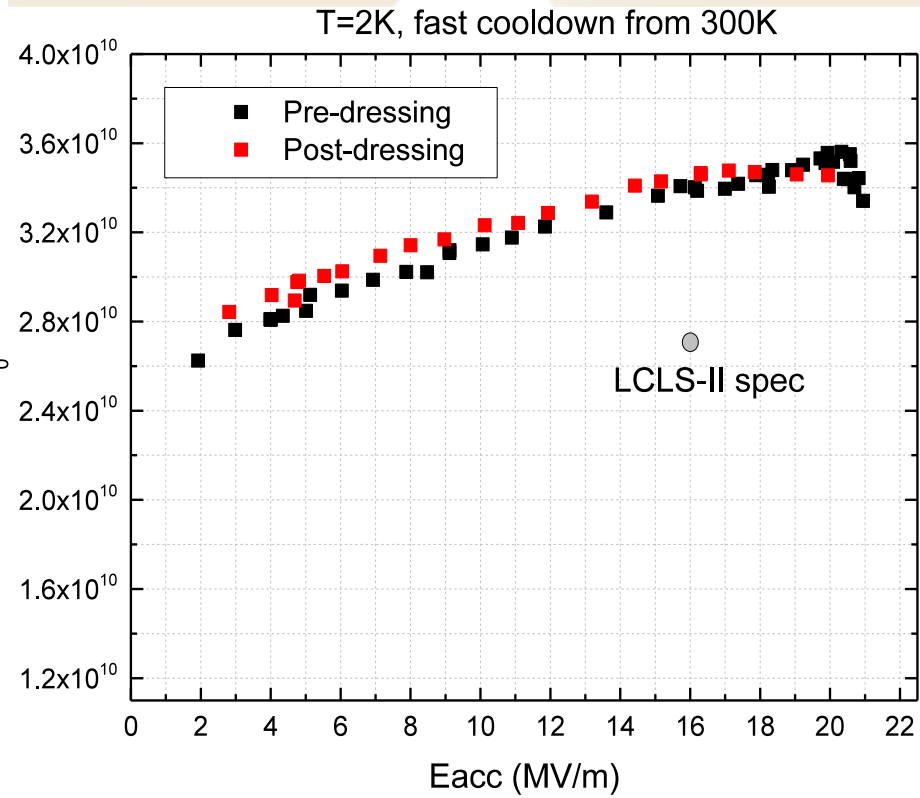

Sample of FNAL single cells results. More than 40 cavities have been nitrogen treated so far systematically producing 2-4 times higher Q than with standard surface processing techniques.

First high Q dressed cavity preserving identical performance pre-post dressing

High Q0 R&D program making rapid progress

High Q0 testing done at 3 labs: Fermilab (from 2012), JLab, and Cornell

MOPP054
Continuous-wave horizontal tests of dressed 1.3 GHz SRF cavities for LCLS-II
A. Hocker, et al.

TUIOC02
Breakthrough technology for very high quality factors in SCRF cavities
A. Romanenko

TUPP138
Analysis of New High-Q0 SRF Cavity Tests by Nitrogen Gas Doping at Jefferson Lab
C.E. Reece

High Q0 Program 9 cell results – ***inclusive*** (through August 5)		
	Q0	E_acc (MV/m)
Average	3.14E+10	18.3
Number of 9 cell tests		Number of test cavities
22		11

Includes 2 horizontal tests (and one dressed-cavity VTS)
Only one vertical test Q0 below 2.3E10

Acknowledgements

JNG and the LCLS-II collaboration gratefully acknowledge invaluable help that LCLS-II has received from colleagues in the ILC Global Design Effort, as well as the European XFEL Project and DESY. Special thanks go to Reinhard Brinkmann and Hans Weise.

JNG thanks Dana Arenius, Paul Emma, Anna Grasselino, Arkadiy Klebaner, Yuri Orlov & Marc Ross & Tom Peterson for the use of their presentation materials.

JNG is fortunate to have the privilege to represent this extraordinary collaboration

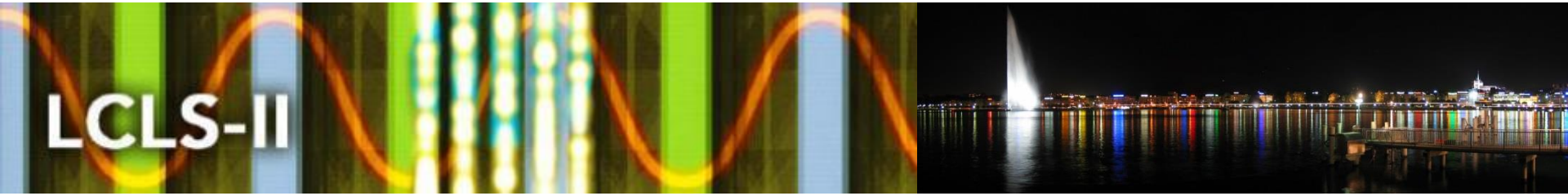

End of Presentation

SLAC NATIONAL ACCELERATOR LABORATORY

BERKELEY LAB
Lawrence Berkeley National Laboratory

Argonne NATIONAL LABORATORY

CORNELL UNIVERSITY FOUNDED A.D. 1865

Fermilab

Jefferson Lab

U.S. DEPARTMENT OF ENERGY
Office of Science


END OF PRESENTATION

LCLS-II Layout

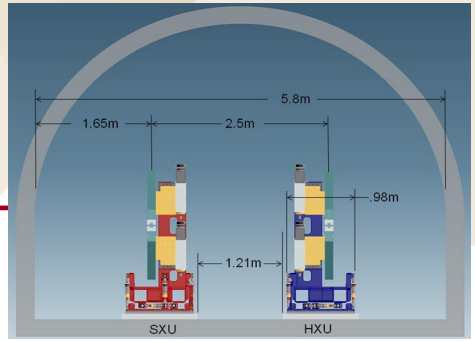

(plan view - not to scale)

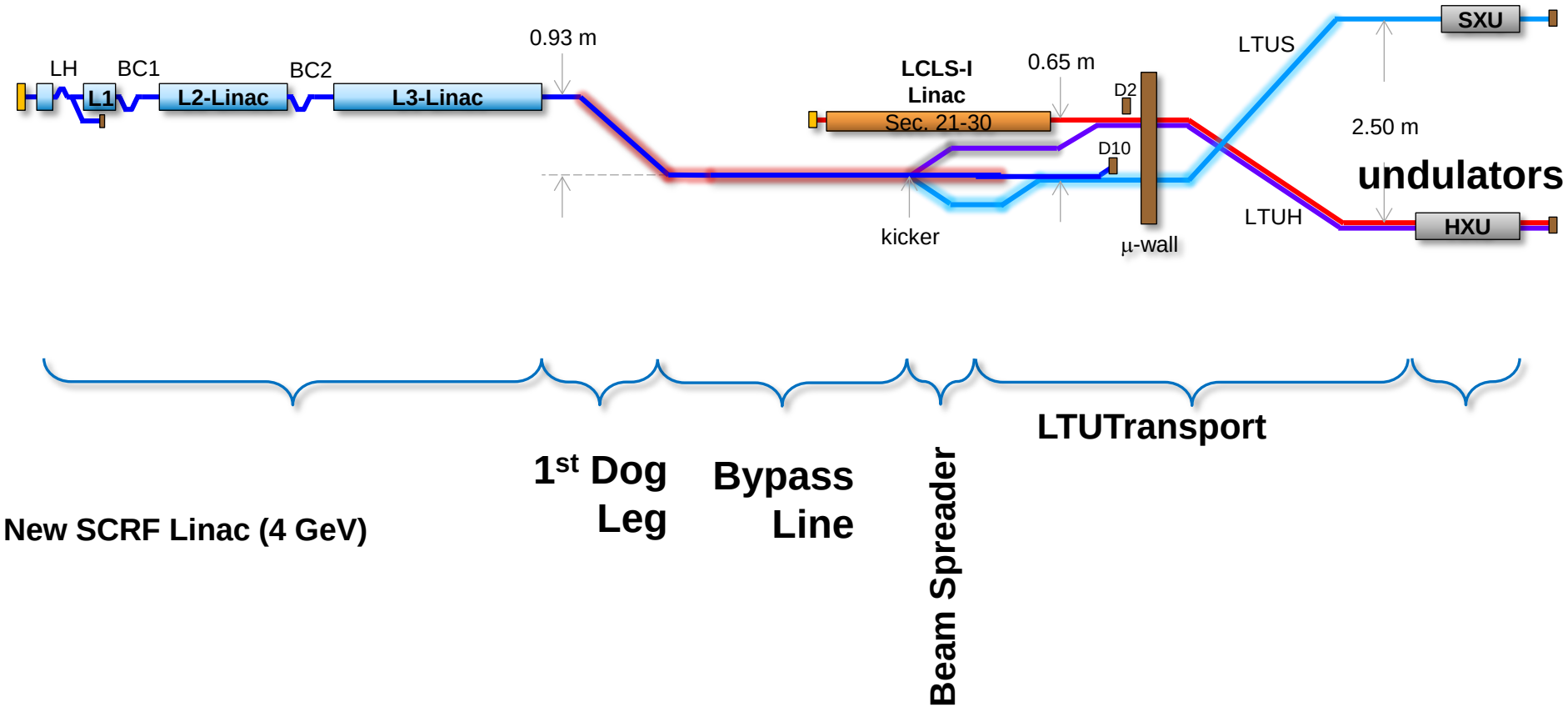

"glowing" sections indicate these are not in the vertical plane of either linac

Undulators in LCLS Undulator Hall

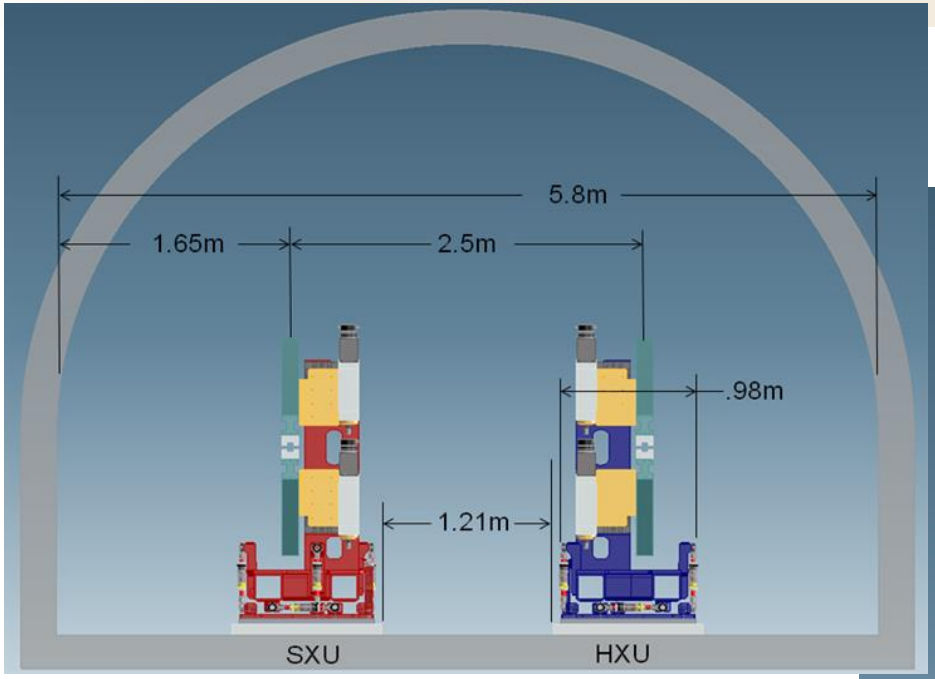

LBNL VG Undulator Design

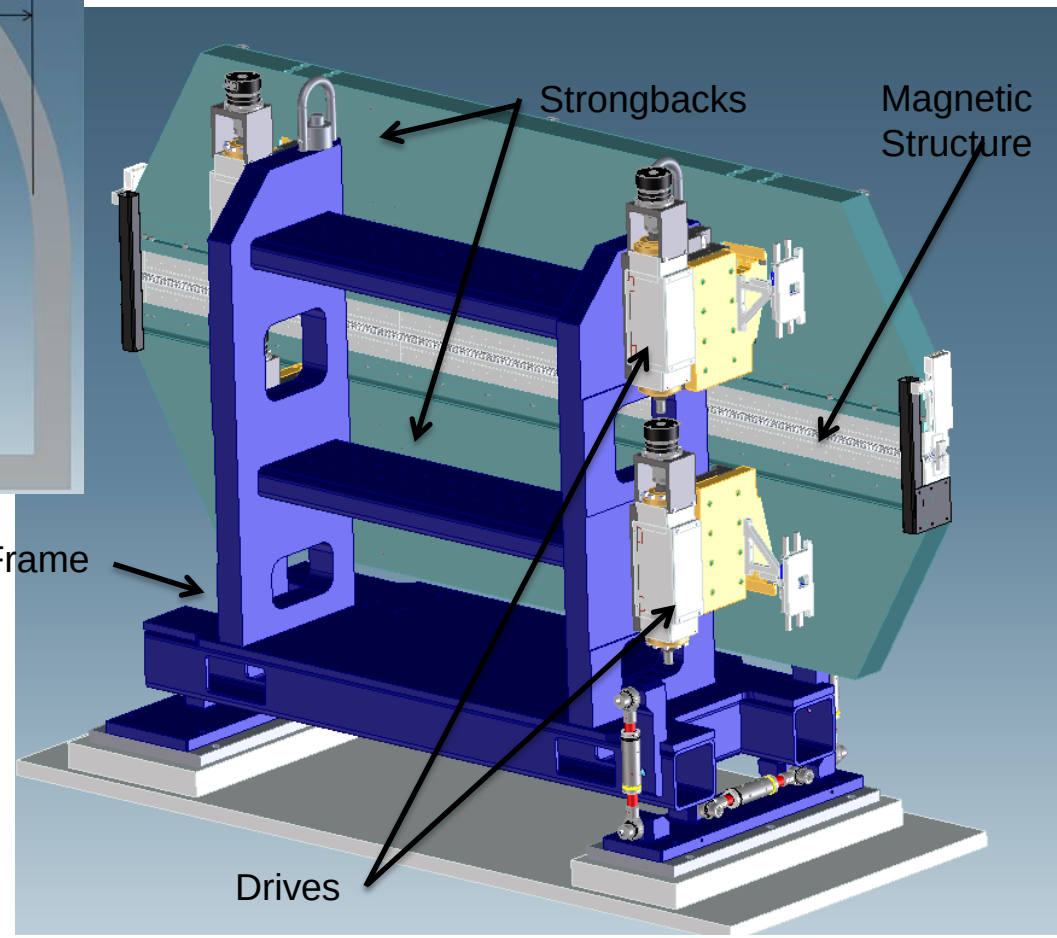

Well on our way to a full scale prototype as part of LCLS-II$_{\text{Phase I}}$

D. Bruch, S. Marks, M. Rowen

Accelerator Layout

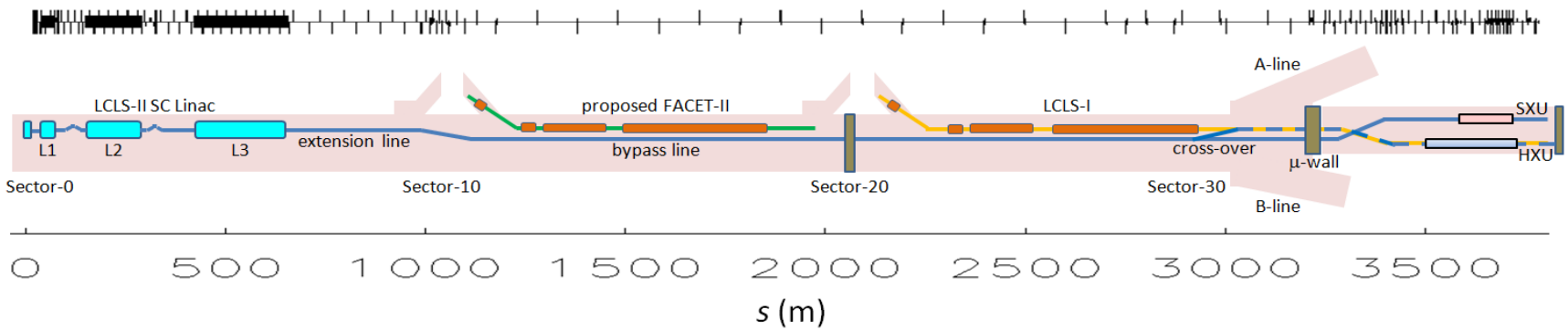

- New Injector, SCRF linac, and extension installed in Sectors 0-10
- Re-use existing Bypass line from Sector 10 → BSY
- Re-use existing high power dump in BSY and add rf spreader to direct beams to dump, SXR or HXR
- Install new variable gap HXR (replacing LCLS-I) and SXR
- Re-use existing transfer line (LTU) to HXR; modify HXR dump
- Construct new LTU to SXR and new dump line
- Modify existing LCLS-I X-ray optics and build new SXR X-ray line

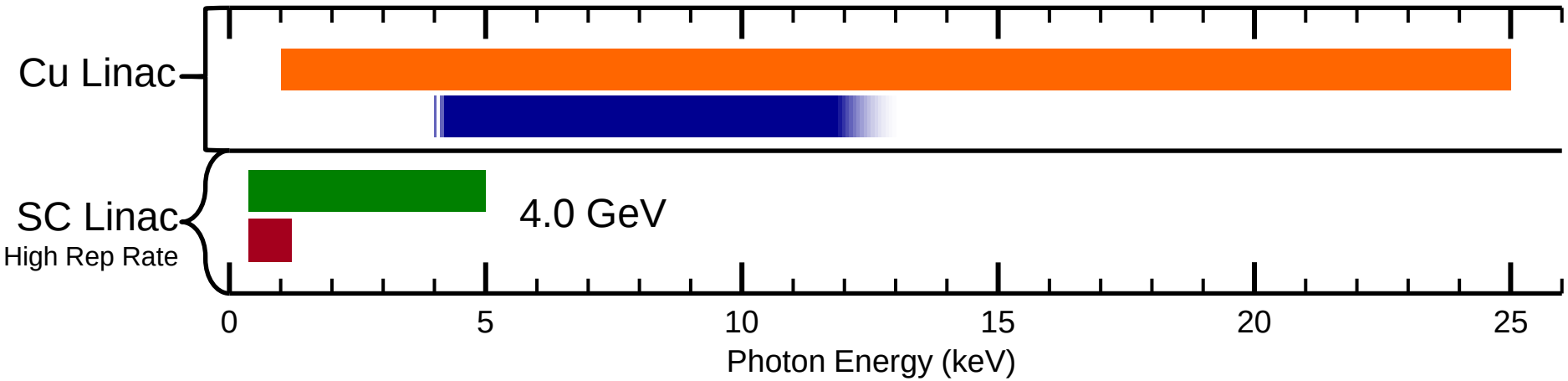

Legend

- Cu SASE
- Cu Self Seeded
- High Rep Rate SASE
- Self Seeded (Grating)

- Hard X-Ray Source:
  - 1-5 keV w/ 4 GeV SC linac
  - Up to 25 keV with LCLS Cu Linac
- Soft X-Ray Source:
  - 250 eV-1.2 keV w/ 4 GeV linac
    - 200 eV requires <4 GeV

Possible Instrument Layout

Room for

- Hi Field Phys.
- RIXS
- SXR “toolkit”